OREWEB.CA
THE CORE OF YOUR OFFICE ENVIRONMENT
Authorized Dealer Canada

BUY IT NOW: Click Here
Dahle 440 Paper Trimmer

BUY IT NOW: Click Here
Dahle 442 Paper Trimmer

BUY IT NOW: Click Here
Dahle 444 Paper Trimmer

BUY IT NOW: Click Here
Dahle 446 Paper Trimmer

BUY IT NOW: Click Here
Dahle 448 Paper Trimmer

BUY IT NOW: Click Here
Dahle 448s Paper Trimmer

440 442 444 446 448

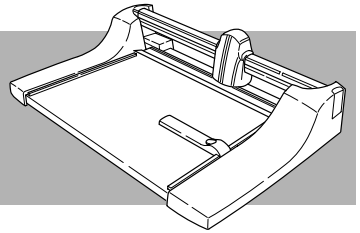

- (D) Bedienungsanleitung Schneidemaschine
- (GB) Cutting machine operating instructions
- (F) Mode d'emploi du massicot
- (E) Instrucciones de uso de la guillotina
- (I) Istruzioni per l'uso per il tagliacarta
- (NL) Gebruiksaanwijzing snijmachine
- (DK) Brugsanvisning skæremaskine
- (S) Bruksanvisning skärmaskin
- (SF) Leikkurin käyttöohje
- (N) Bruksanvisning skjæremaskin
- (P) Instruções de uso para a máquina de corte
- (TR) Kesme makinası kullanma kılavuzu
- (GUS) Руководство по эксплуатации резальной машины
- (CZ) Návod k obsluze řezacího stroje
- (PL) Instrukcja obsługi maszyny do cięcia
- (H) Kezelési utasítás vágógéphez
- (SLV) Navodilo za obratovanje rezalnega stroja
- (HR) Uputa za pogon stroja za rezanje
- (GR) Οδηγίες λειτουργίας μηχανής κοπής
- (RO) Instrucțiuni de utilizare a maşinii de tăiat
- (JAP) カッターの使用説明書
- (ARA) تعليمات استعمال الة قطع الاوراق المكدسة
- (CHIN) 裁纸机使用说明

DAHLE

GS geprüfte Sicherheit

00440.90.1800 - 03/02 -

Specifications and test data may change with-out notice, check with www.OREweb.ca for current product details and pricing.

OREWEB.CA
THE CORE OF YOUR OFFICE ENVIRONMENT
Authorized Dealer Canada

- D Allgemeine Angaben
- GB General data
- F Données générales
- E Datos generales
- I Dati generali
- NL Algemene instructies
- DK Generelle angivelser
- S Allmänt
- SF Yleiset tiedot
- N Generelle opplysninger
- P Indicações gerais
- TR Genel bilgiler
- GUS Общие указания
- CZ Všeobecné údaje
- PL Dane ogólne
- H Általános adatok
- SLV Splošni podatki
- HR Opći podaci
- GR Γενικά στοιχεία
- RO Date generale
- JAP 一般データ
- ARA معلومات عامة
- CHIN 概述

- D Bedienung
- GB Operation
- F Commande
- E Uso
- I Comando
- NL Bediening
- DK Betjening
- S Handhavande
- SF Käyttö
- N Betjening
- P Modo de utilização
- TR Kullanma
- GUS Управление
- CZ Obsluha
- PL Obsługa
- H Kezelés
- SLV Upravljanje
- HR Rukovanje
- GR Χειρισμός
- RO Comanda
- JAP 操作
- ARA التشغيل
- CHIN 操作使用

- D Wartung
- GB Maintenance
- F Entretien
- E Mantenimiento
- I Manutenzione
- NL Onderhoud
- DK Vedligeholdelse
- S Skötsel
- SF Huolto
- N Vedlikehold
- P Manutenção
- TR Bakım
- GUS Обслуживание
- CZ Údržba
- PL Obsługa techniczna
- H Karbantartás
- SLV Vzdrževanje
- HR Održavanje
- GR Συντήρηση
- RO Întreținere
- JAP 保守
- ARA الصيانة
- CHIN 维护保养

- D Achtung / Vorsicht
- GB Warning / Caution
- F Attention / Prudence
- E Atención / Cuidado
- I Attenzione / prudenza
- NL Attentie / voorzichtig
- DK Bemærk / forsigtig
- S OBS / var försiktigt
- SF Huomio / varo
- N OBS / Forsiktig
- P Atenção / Cuidado
- TR Dikkat / İhtiyat
- GUS Внимание / Осторожно
- CZ Pozor / opatrně
- PL Uwaga / Ostrożnie
- H Figyelem / Vigyázat
- SLV Pozor / Previdnost
- HR Pozor / oprez
- GR Προσοχή / προφύλαξη
- RO Atenție / Precauție
- JAP 危険/注意
- ARA انتبه / احذر
- CHIN 注意／小心

- D Messer nicht an Schneidekante berühren
- GB Do not touch sharp edge of blade
- F Ne pas toucher le côte affûté de la lame
- E No tocar la cuchilla por la parte afilada
- I Non toccare la lama sul filo
- NL Raak het mes niet bij de snijkant aan
- DK Rør ikke ved knivsæggen
- S Rör inte vid knivens skärkant
- SF Älä kosketa terää leikkuureunasta
- N Rør ikke ved knivseggen
- P Não tocar na lâmina da guilhotina
- TR Bıçak kesici uca temas etmemeli
- GUS Не касаться режущей кромкй ножа
- CZ Nedotýkat se ostří nože
- PL Nie dotykać noża po stronie tnącej
- H Ne nyúljon a kés éléhez
- SLV Noža ne prijemati na rezalnem robu
- HR Ne dirati nož po rubu za rezanje
- GR Μην αγγίζετε το μαχαίρι στην κόψη
- RO Nu atingeți tăișu cuțitului
- JAP カッターの刃には触れないで下さい。
- ARA لا تمس الجانب القاطع للآلة
- CHIN 请勿触摸刀刃

- D Gerät standsicher aufstellen
- GB Place in a stable position
- F Installer l'appareil de façon stable
- E Colocar la máquina de manera estable
- I Porre l'apparecchio in posizione stabile
- NL Stel de machine stabiel op
- DK Opstil apparaten stabilt
- S Ställ upp apparaten stabilt
- SF Aseta leikkuri niin, että se pysyy varmasti paikallaan
- N Oppstill apparatet stabilt
- P Colocar a máquina numa posição esatável
- TR Cihazı sağlam yerleştimiz
- GUS Установить устройство надежно и устойчиво
- CZ Přístroj postavit na stabilní místo
- PL Ustawić bezpiecznie urządzenie
- H A készüléket szilárd talapzatra állítsa
- SLV Pripravo stabilno namestiti
- HR Uredaj stabilno postaviti
- GR Τοποθετείτε την συσκευή ώστε να έχει ευστάθεια
- RO A se pune aparatul în poziție sigură
- JAP 装置を安定するようにセットしてください。
- ARA وضع الآلة في وضعية آمنة
- CHIN 牢固地放置设备

Specifications and test data may change with-out notice, check with www.OREweb.ca for current product details and pricing.

OREWEB.CA
THE CORE OF YOUR OFFICE ENVIRONMENT
Authorized Dealer Canada

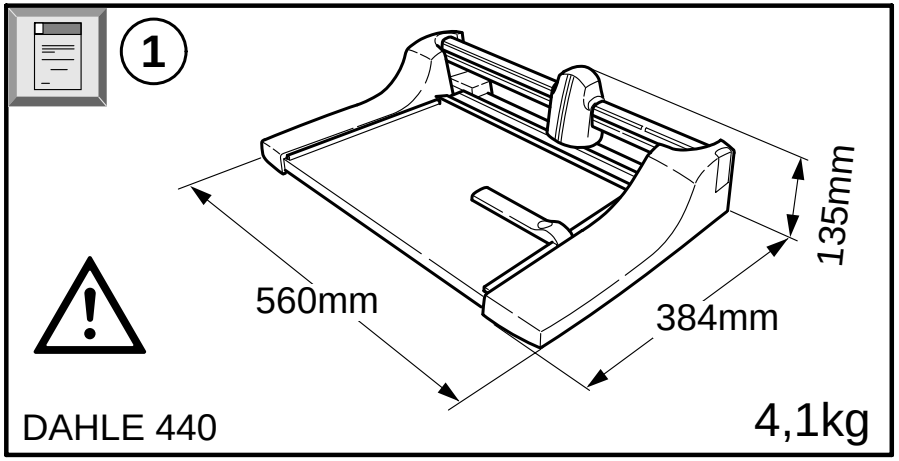

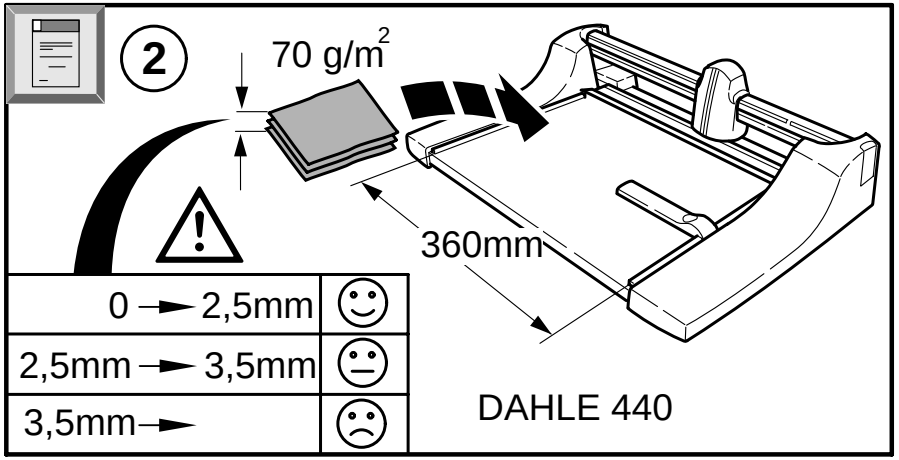

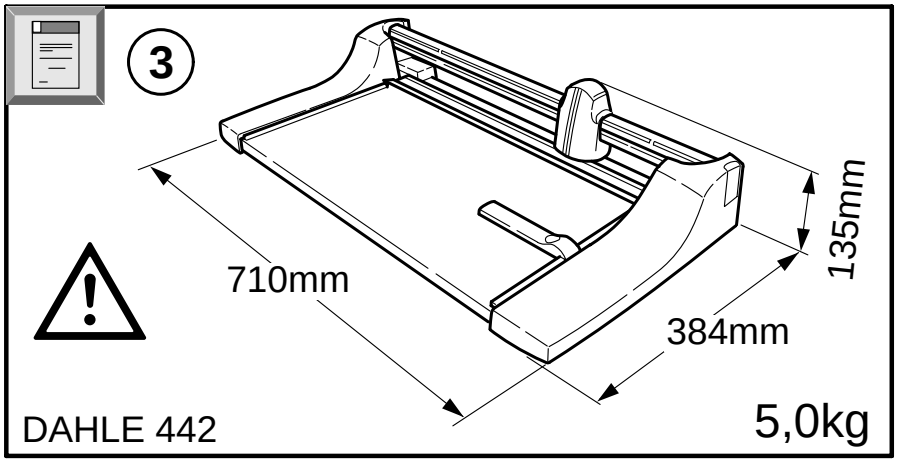

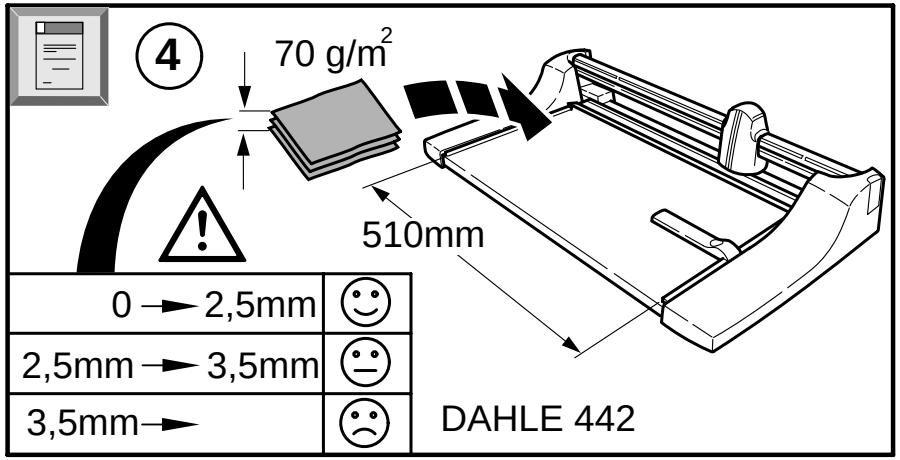

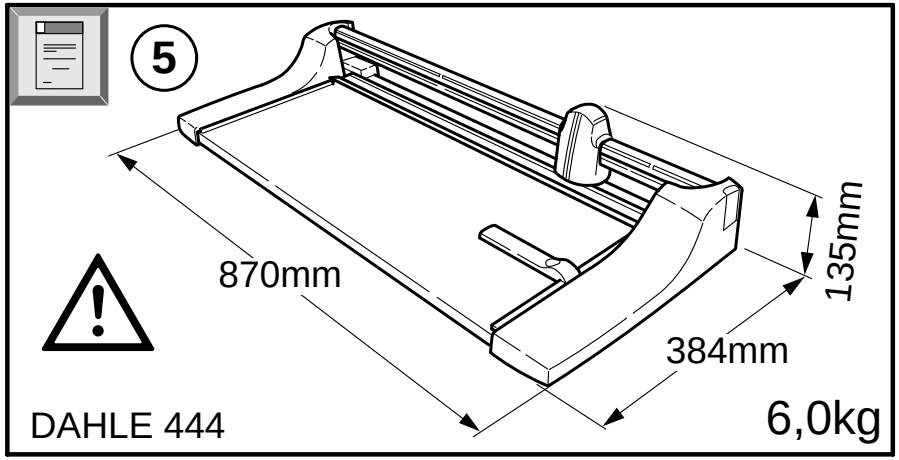

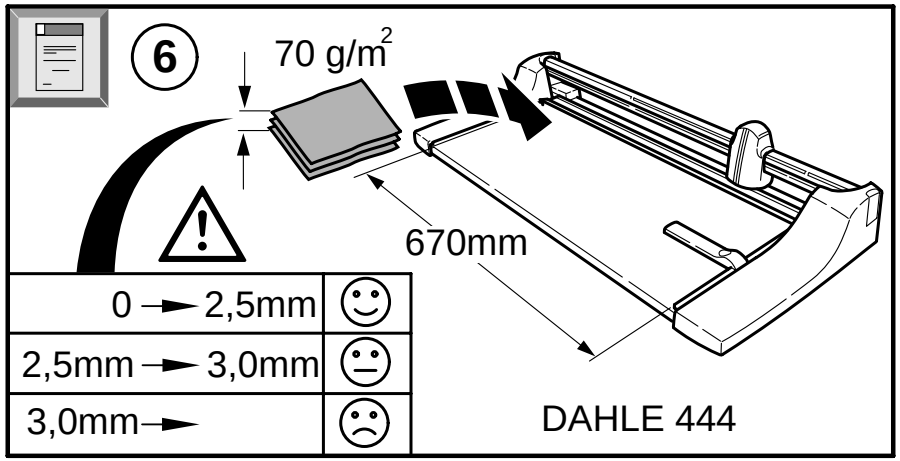

Specifications and test data may change with-out notice, check with www.OREweb.ca for current product details and pricing.

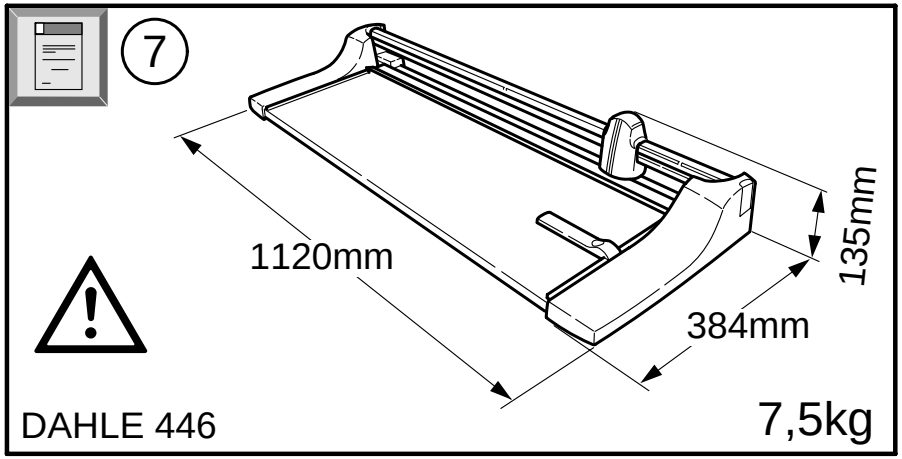

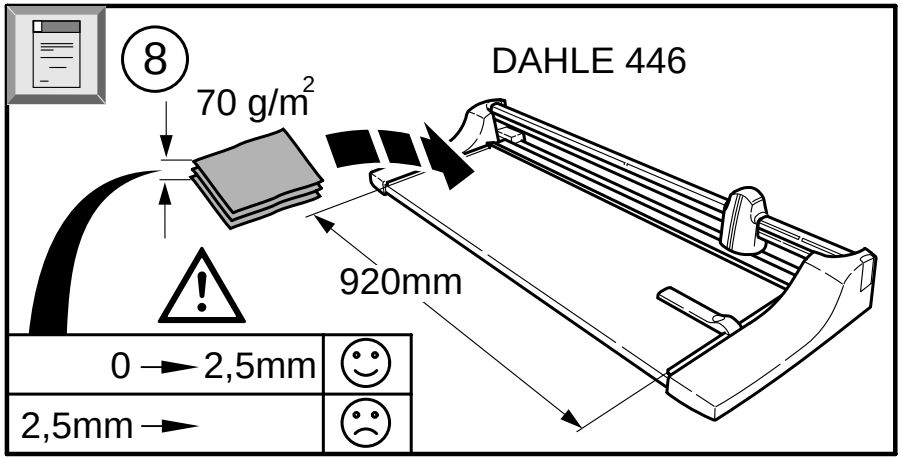

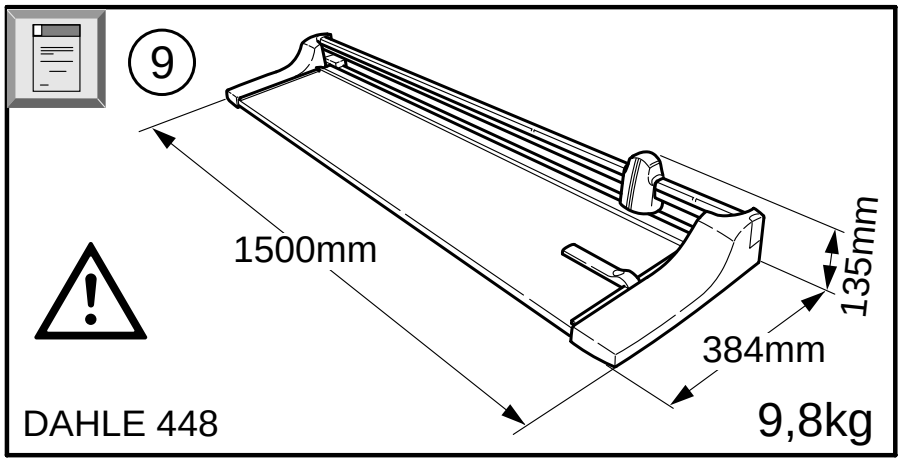

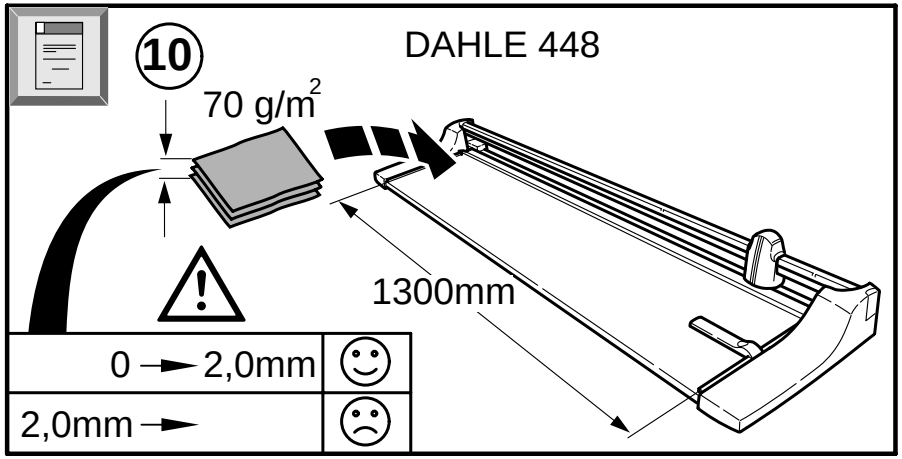

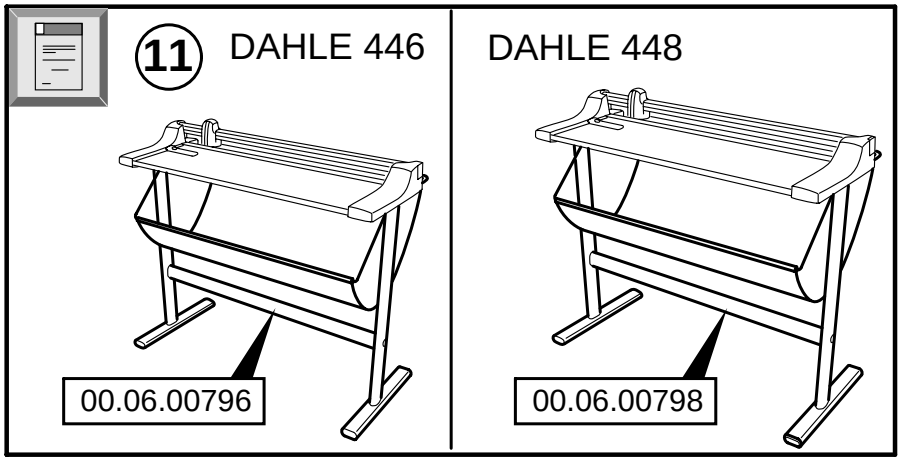

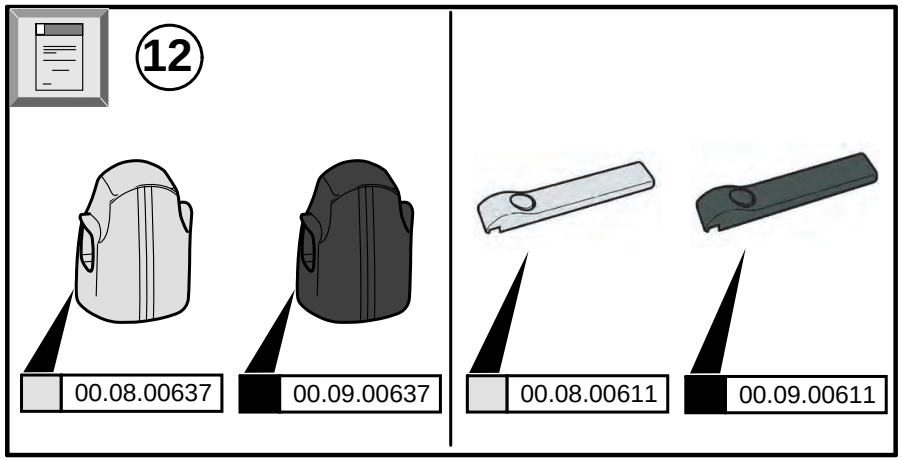

Specifications and test data may change with-out notice, check with www.OREweb.ca for current product details and pricing.

OREWEB.CA
THE CORE OF YOUR OFFICE ENVIRONMENT
Authorized Dealer Canada

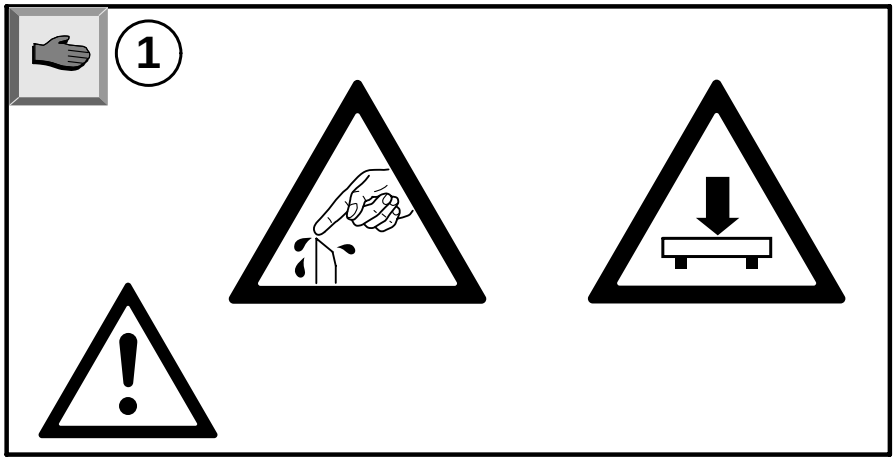

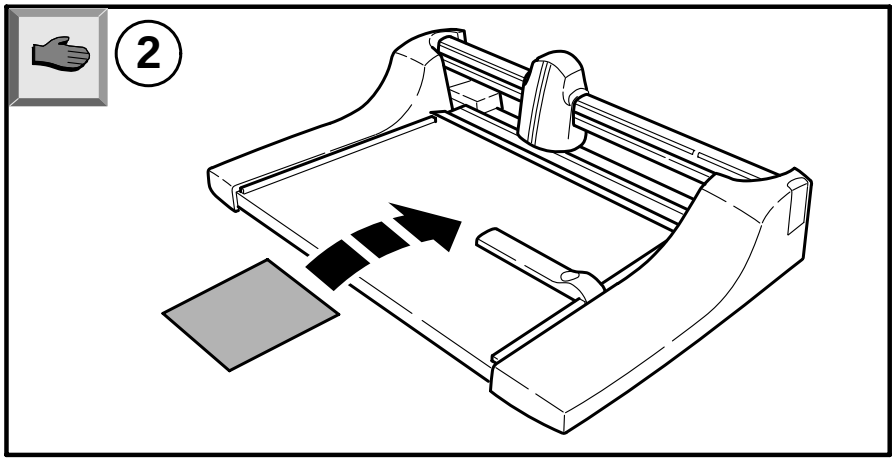

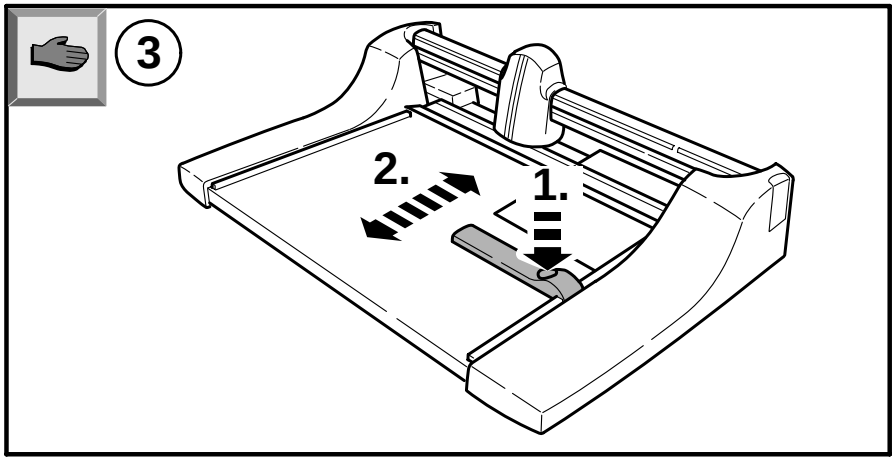

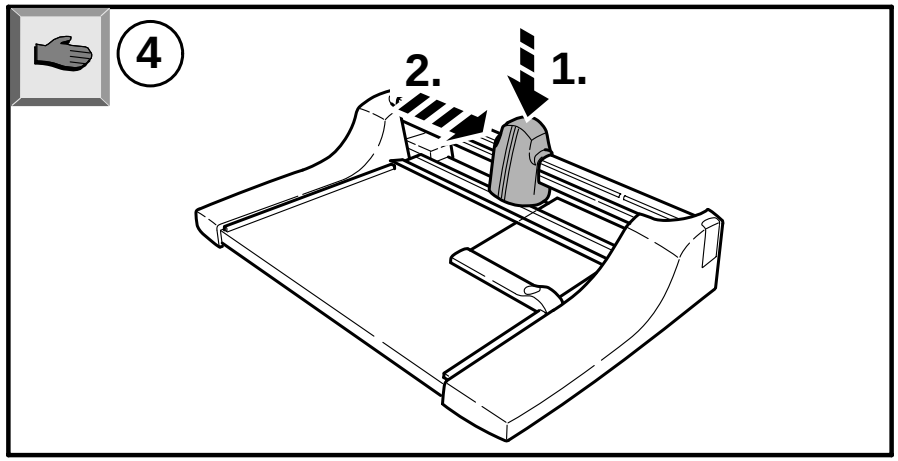

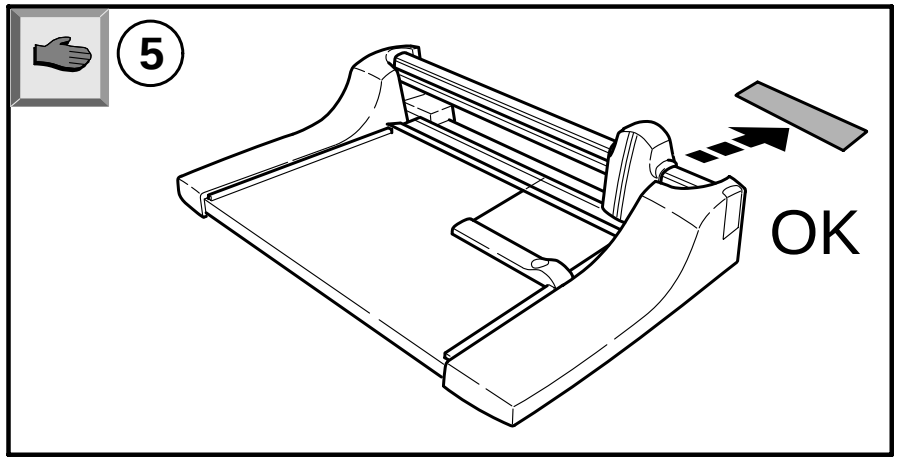

Specifications and test data may change with-out notice, check with www.OREweb.ca for current product details and pricing.

OREWEB.CA
THE CORE OF YOUR OFFICE ENVIRONMENT
Authorized Dealer Canada

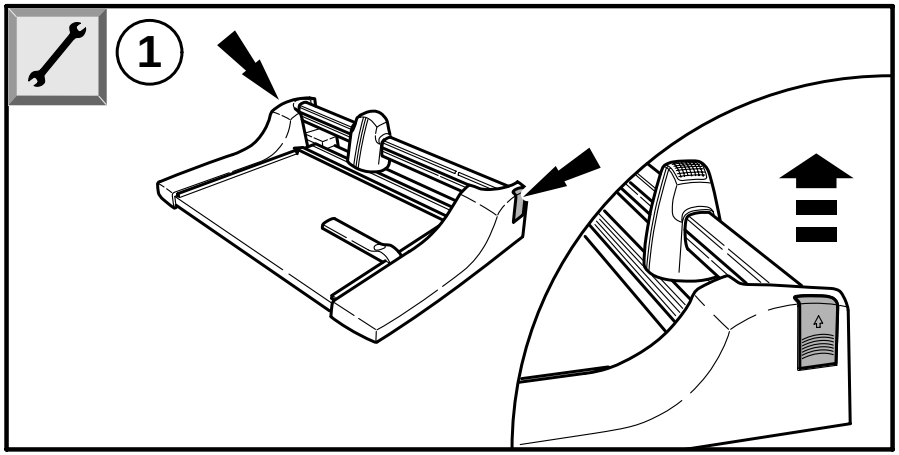

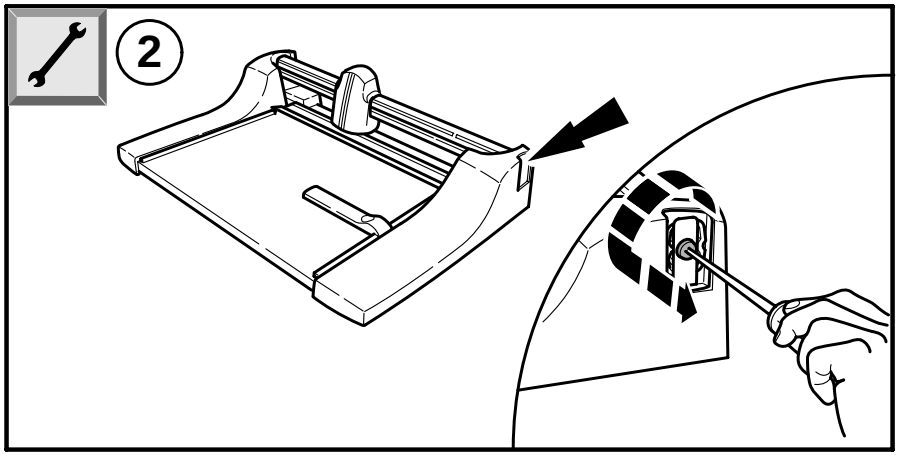

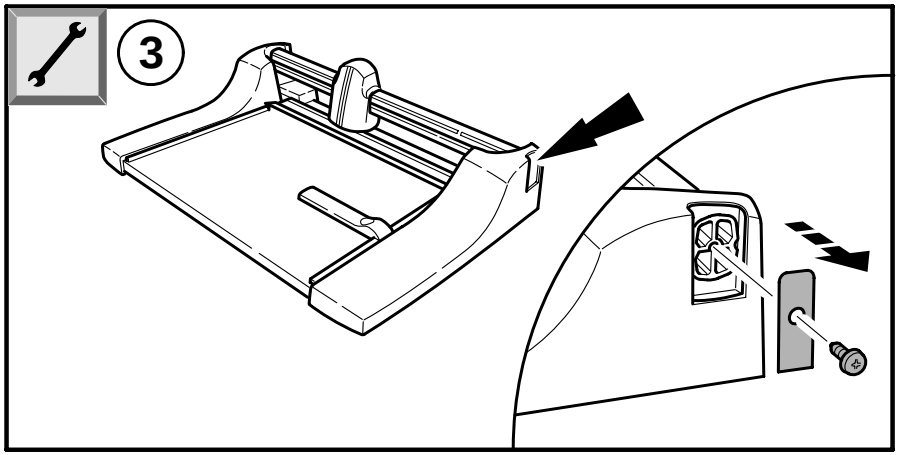

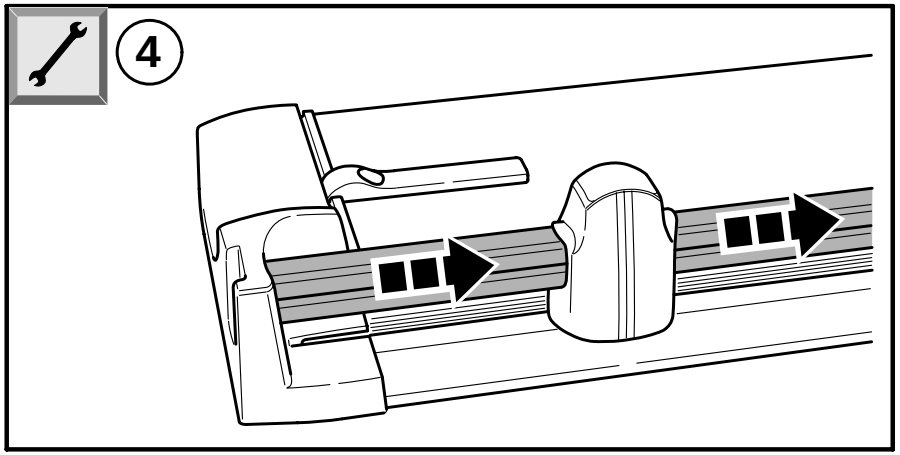

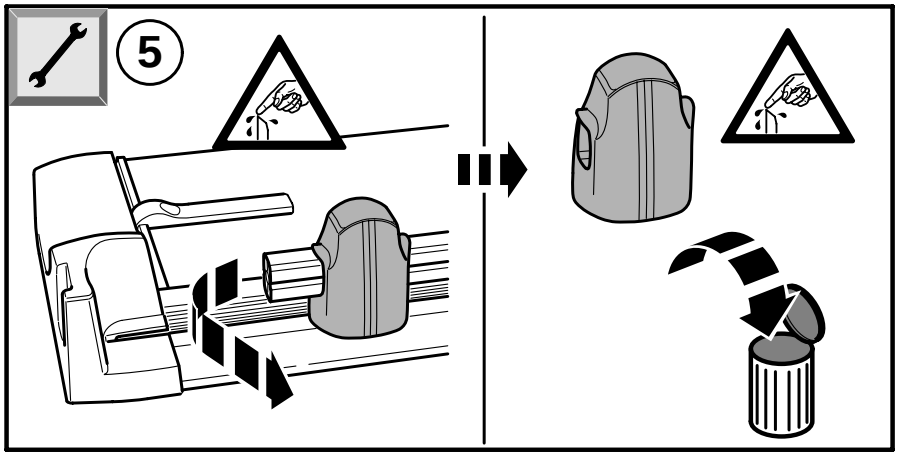

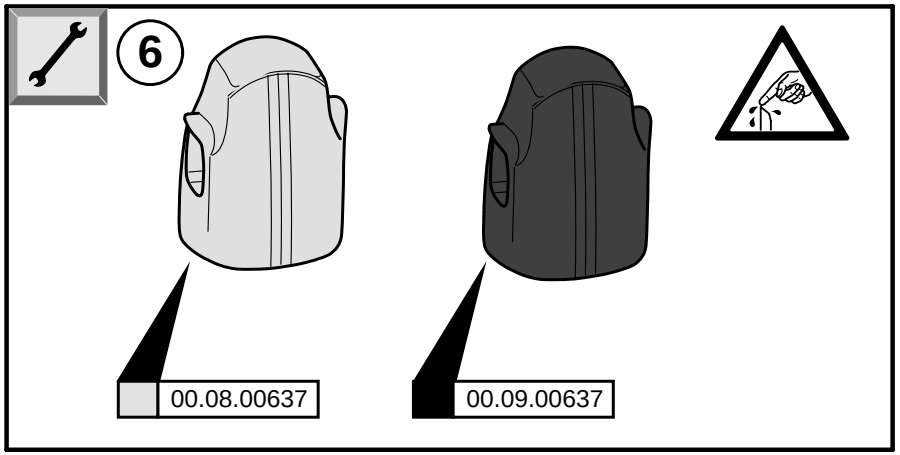

Specifications and test data may change with-out notice, check with www.OREweb.ca for current product details and pricing.

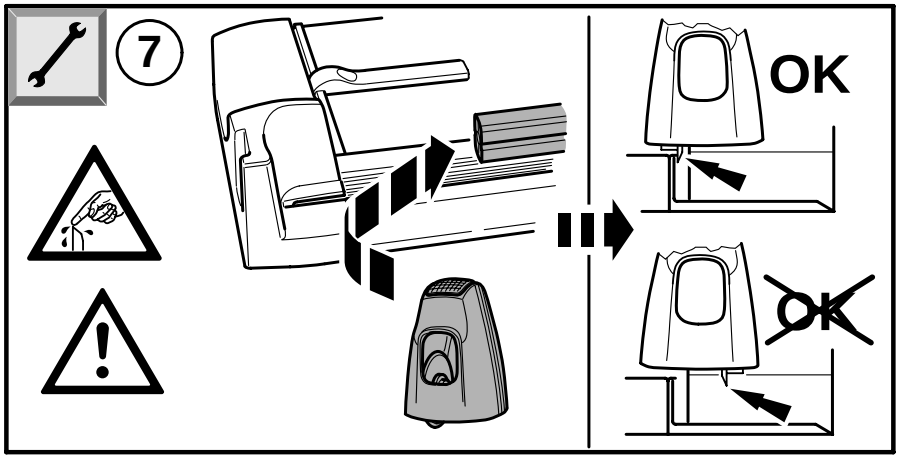

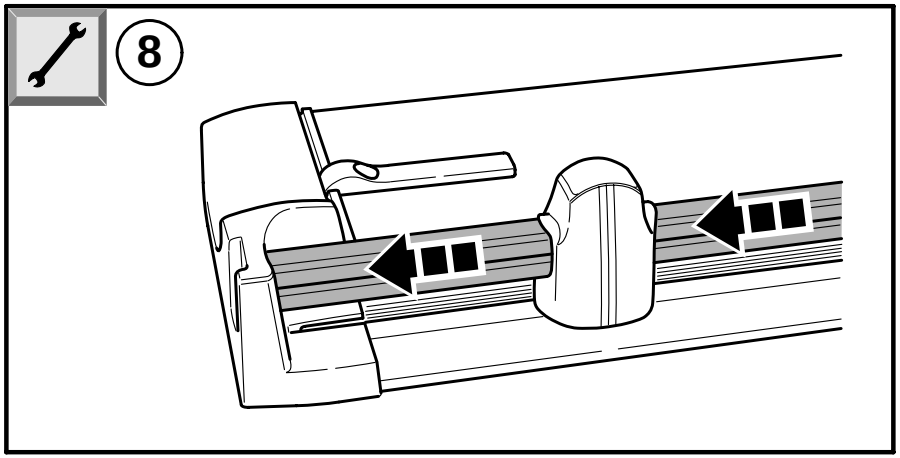

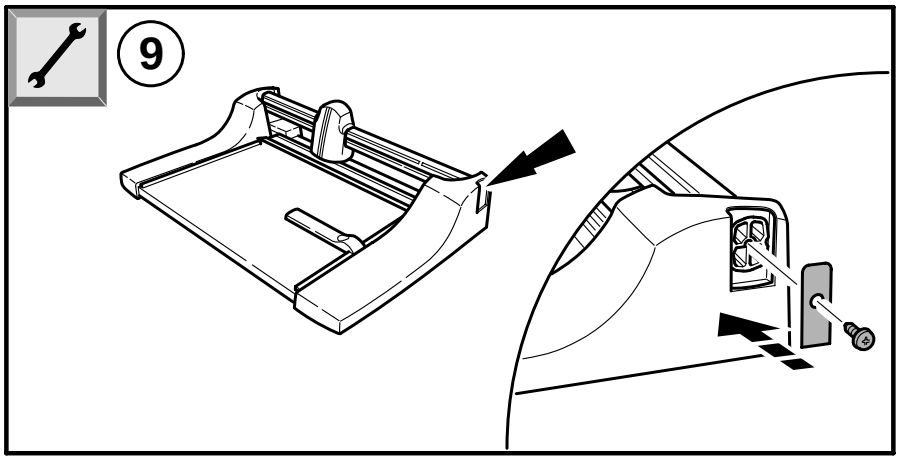

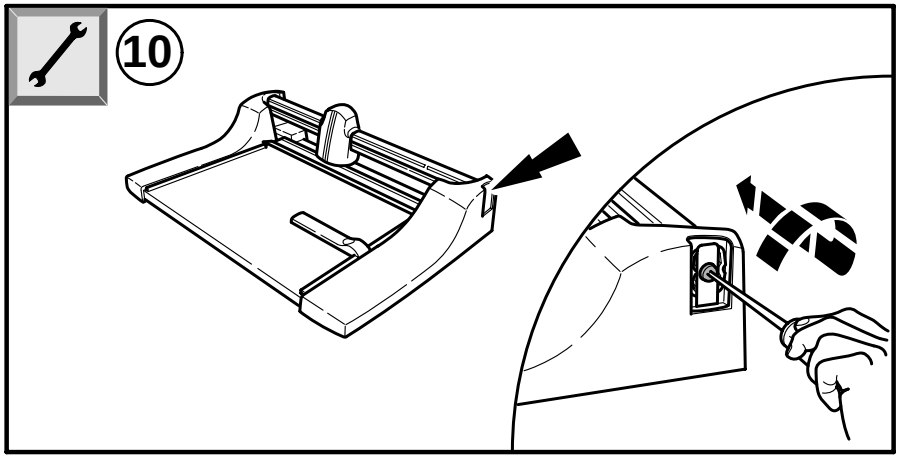

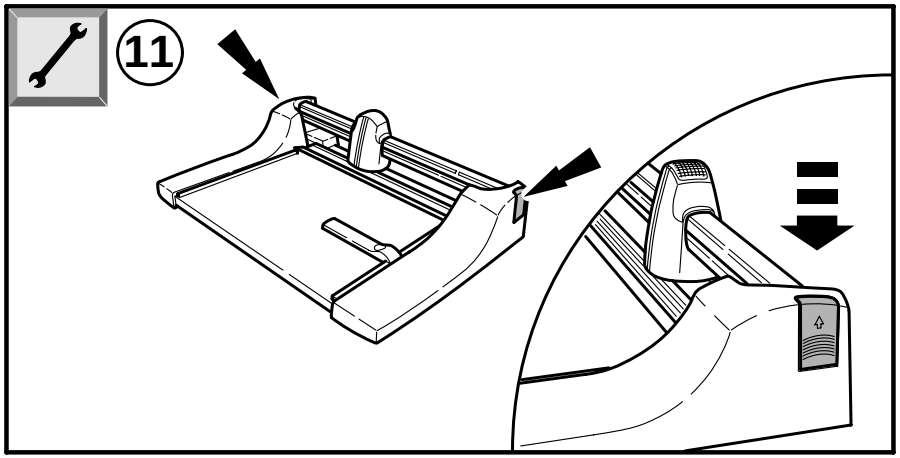

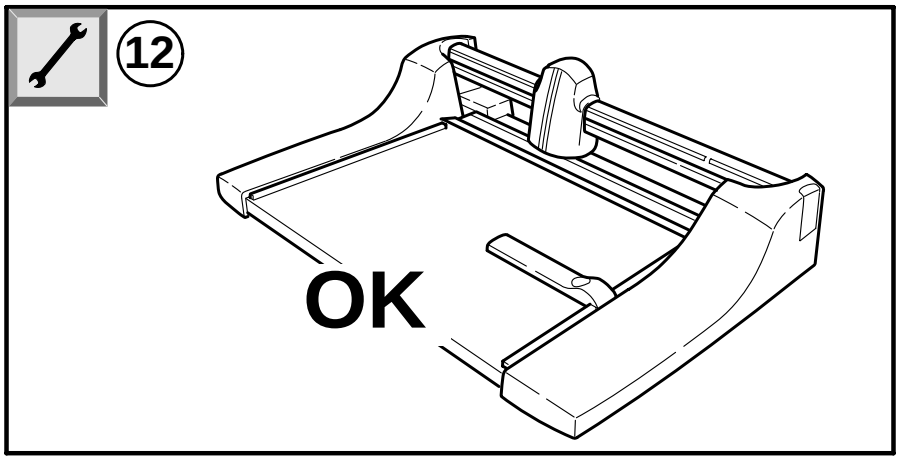

Specifications and test data may change with-out notice, check with www.OREweb.ca for current product details and pricing.

NOTIZEN

NOTIZEN

Specifications and test data may change with-out notice, check with www.OREweb.ca for current product details and pricing.